Mosaiced 4K*4K CCD Camera System

R. Srinivasan

G. Srinivasulu

RS CrH echelle spectra with Marconi 2K x 4K CCD on 16/2/'06

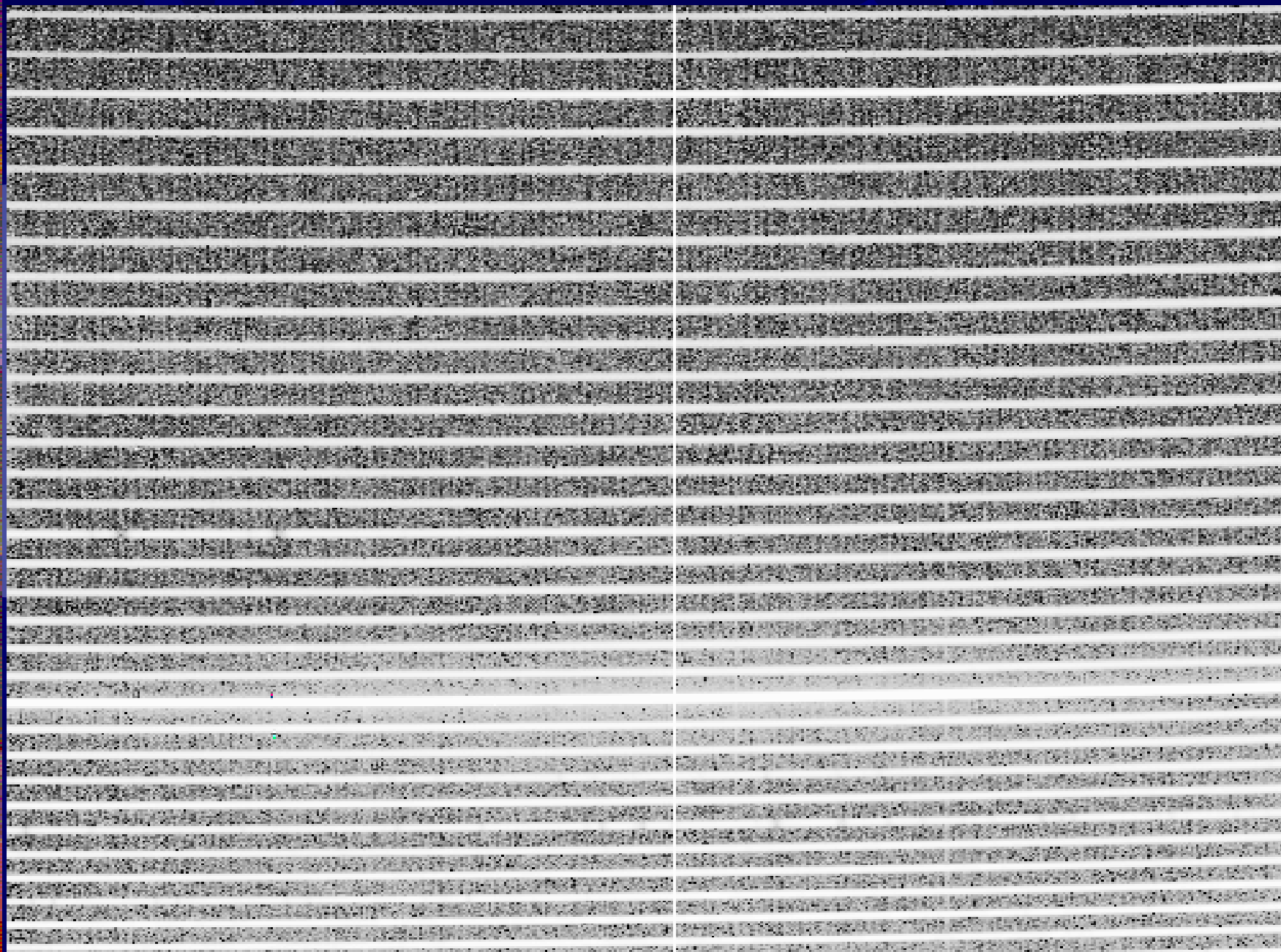

CCD 44-82 Characteristics

- Device : CCD 44-82 (2K*4K) from EEV Ltd.
- Format : 2048*4096 Dual Read-Out
- Pixel Size : 15 µm Square
- Imaging Area : 30.7 * 61.4 mm
- Sensitivity : Back Illuminated, 84.2% QE @500 nm
- Three Side Buttable
- Full Well : 200 Ke/Pixel
- Grade : Scientific Grade 0

Typical spectral response basic -100C

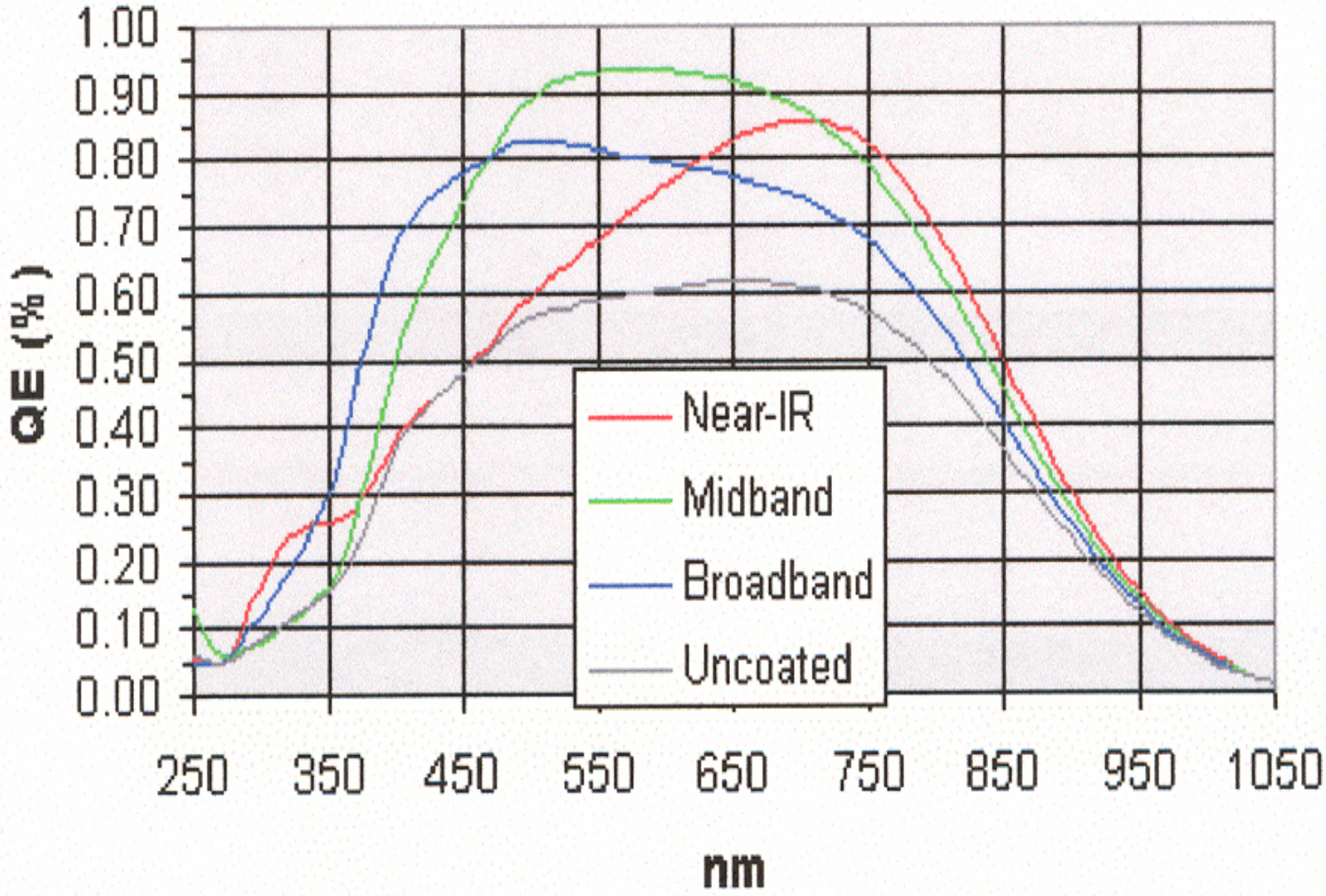

CCD Spectral response enhanced

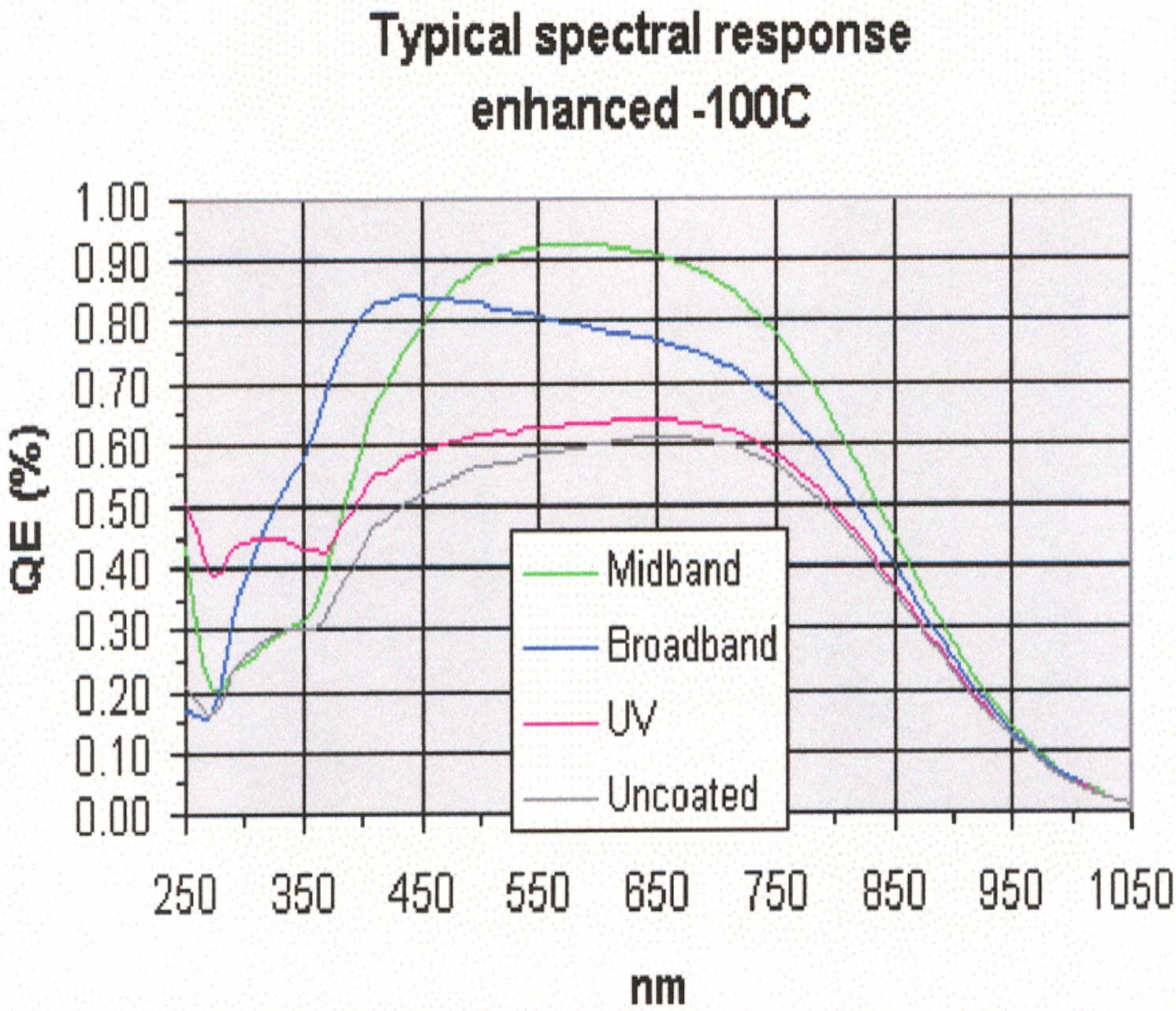

CCD Spectral response deep depletion

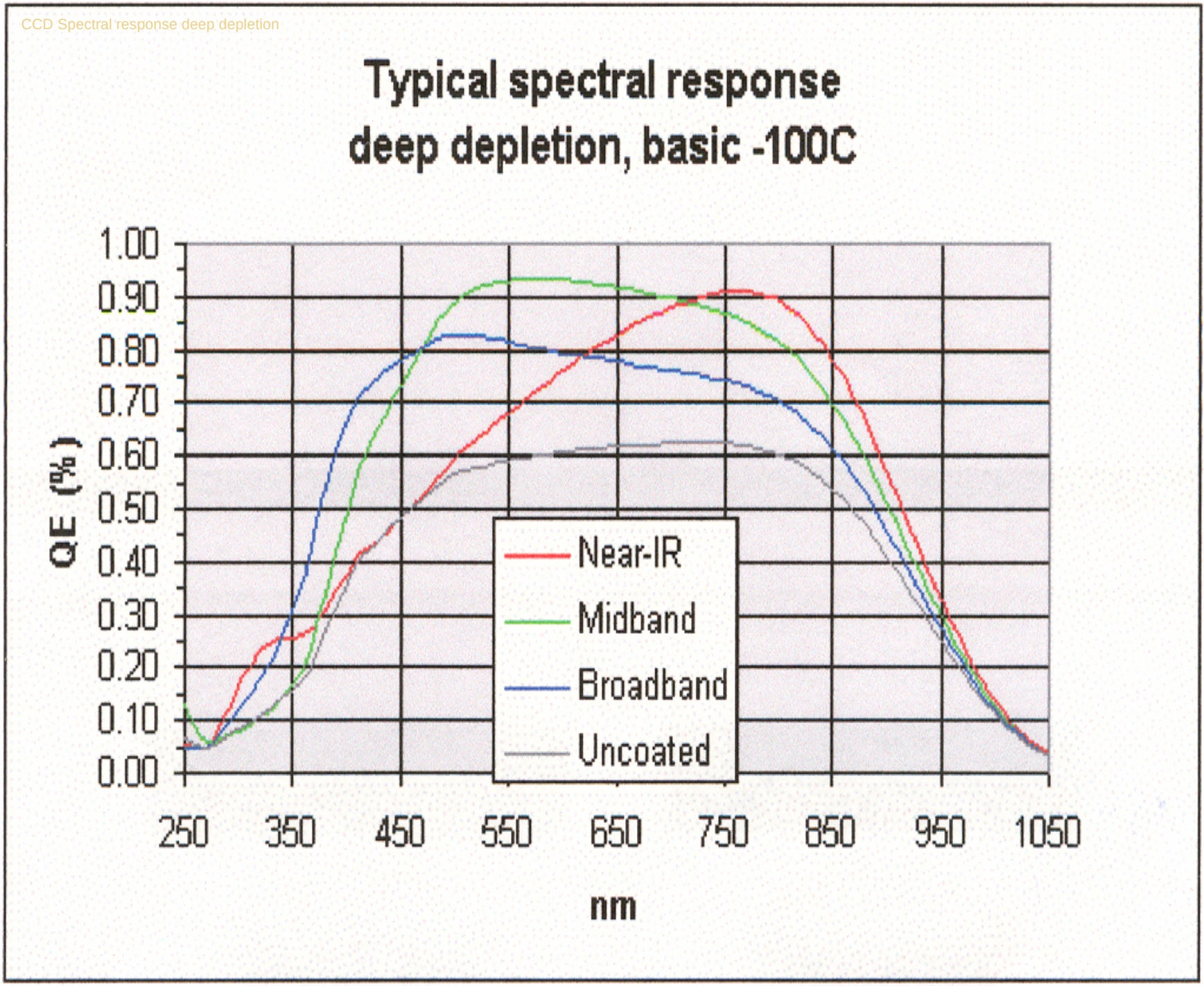

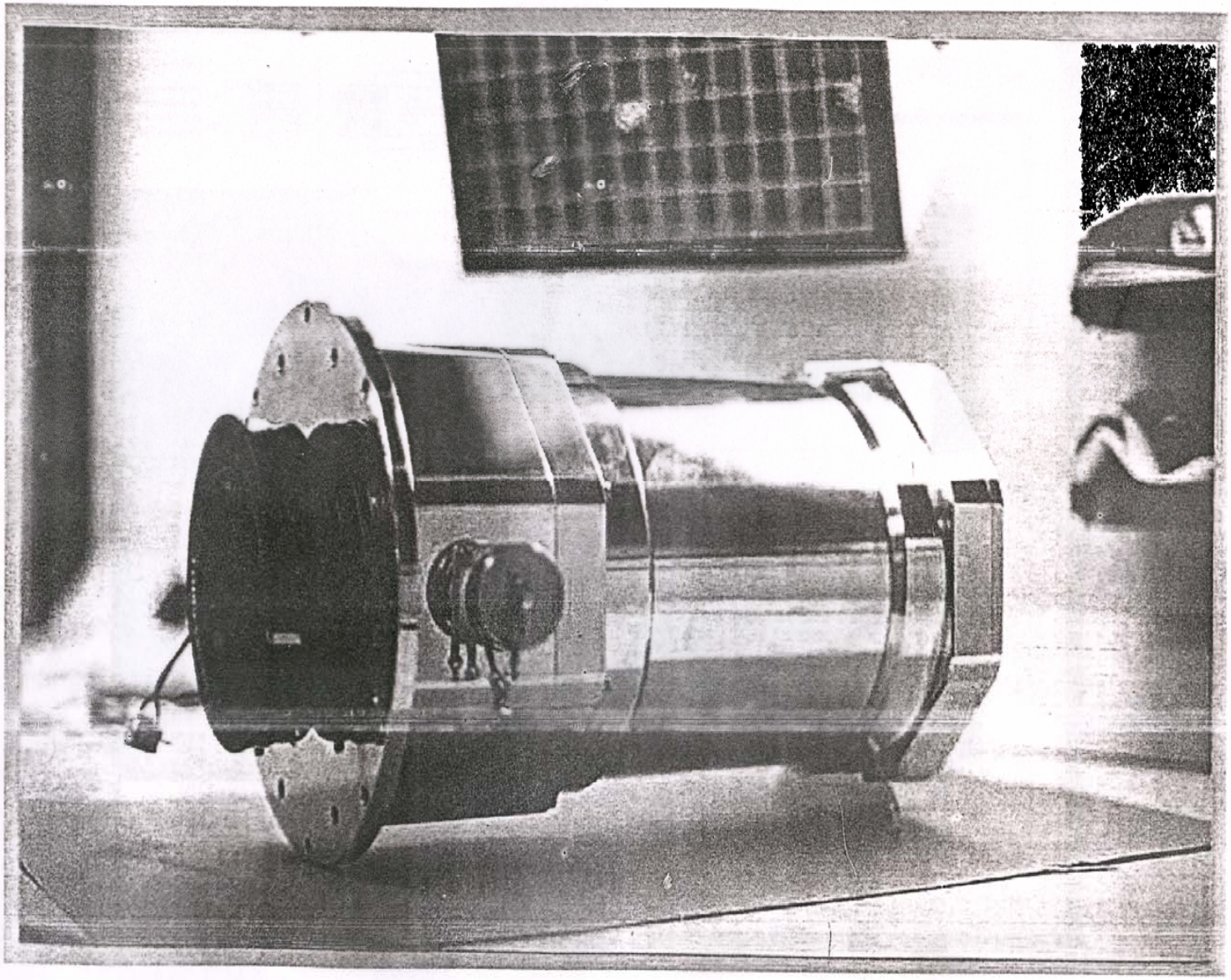

CCD Cryostat

Liquid hold times of the cryostat

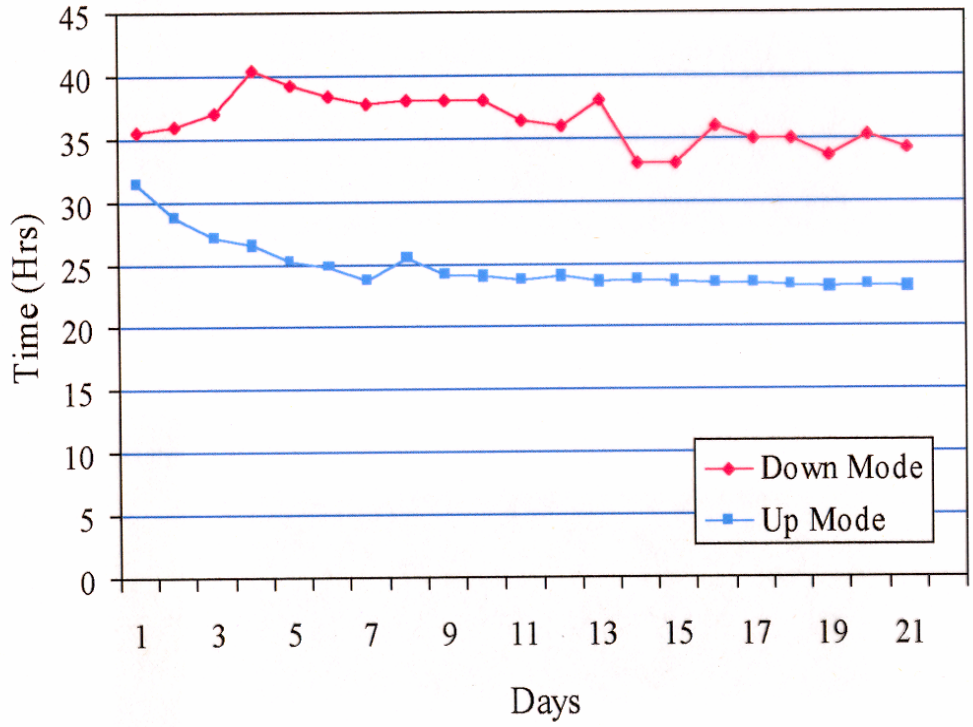

IIA CCD Controller

Functional block diagram of camera system

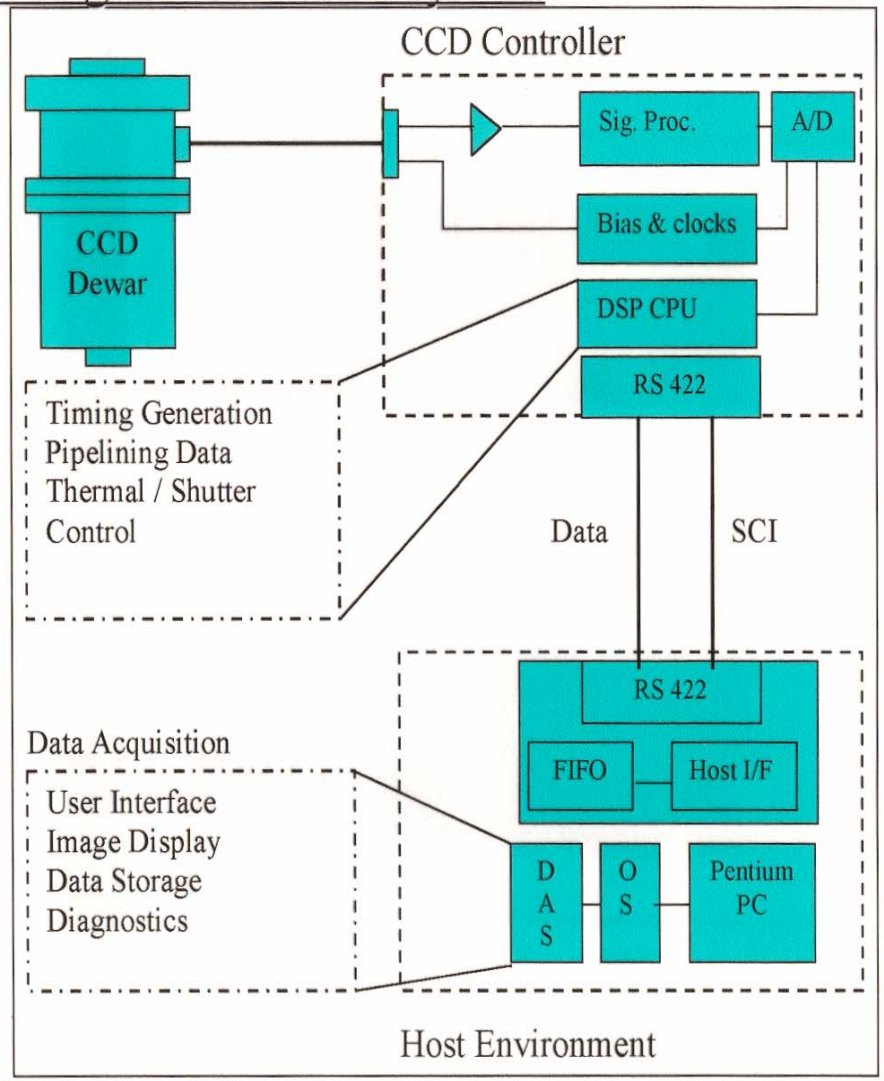

IIA CCD Controller

Hardware details - Timing board block diagram

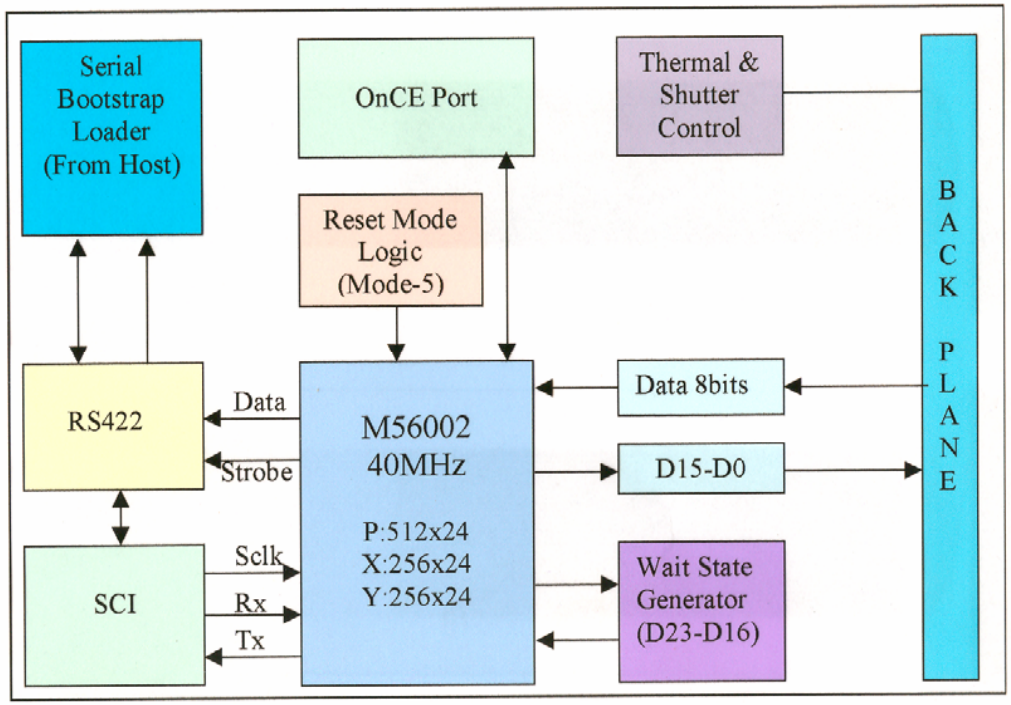

IIA CCD Controller

Hardware details - Bias and clocks board

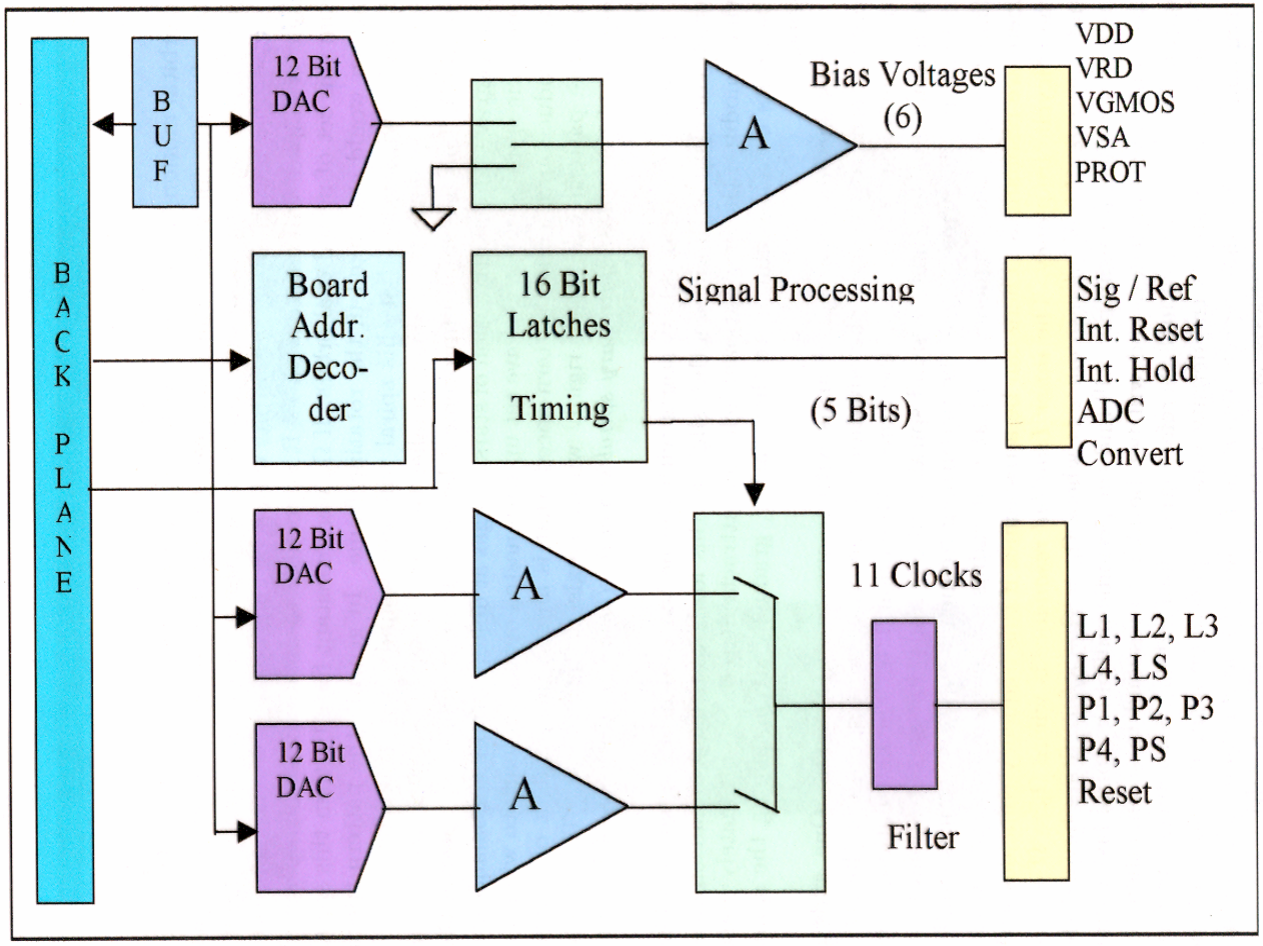

CCDs placed in the dewar

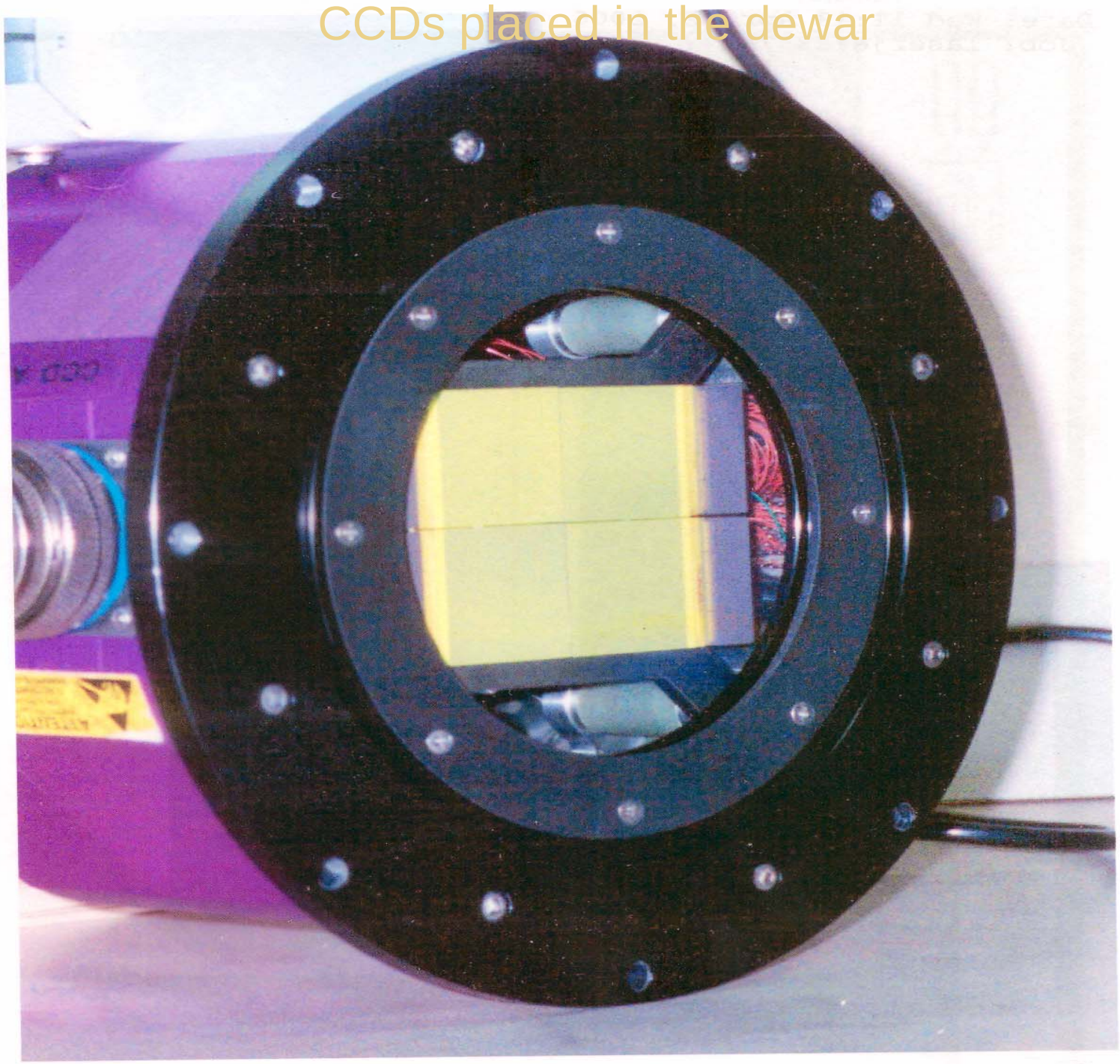

Mosaiced 4K X 4K CCD camera system

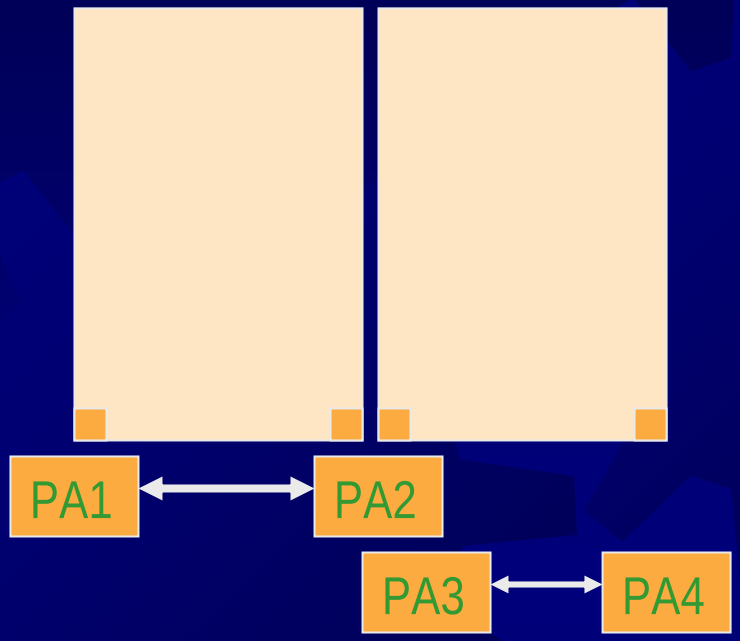

- Any one CCD or Both can be selected
- Downloading DSP code
- Set Bias and clock voltages
- Initializes required memory
- Interleaved data scrambling with memory pointers

Performance of mosaic CCD camera system

Calibration setup

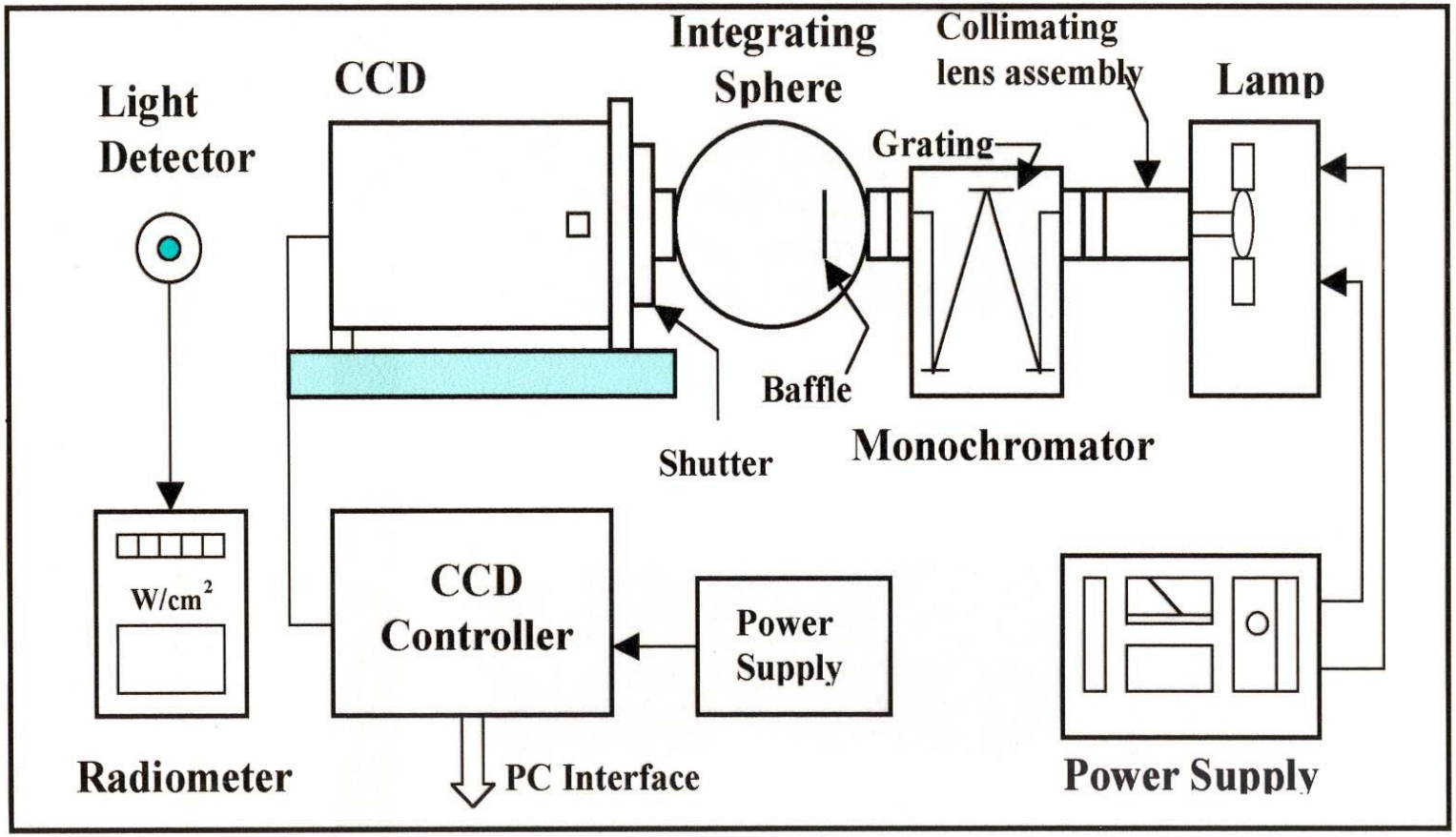

Current Status

- One Dewar is under fabrication in our mechanical workshop to accommodate a 4K*4K system.
- The Hardware changes have been finalized.
- The Software changes, Testing and Hardware implementation by Dec 07.

Thank you